0199

0198

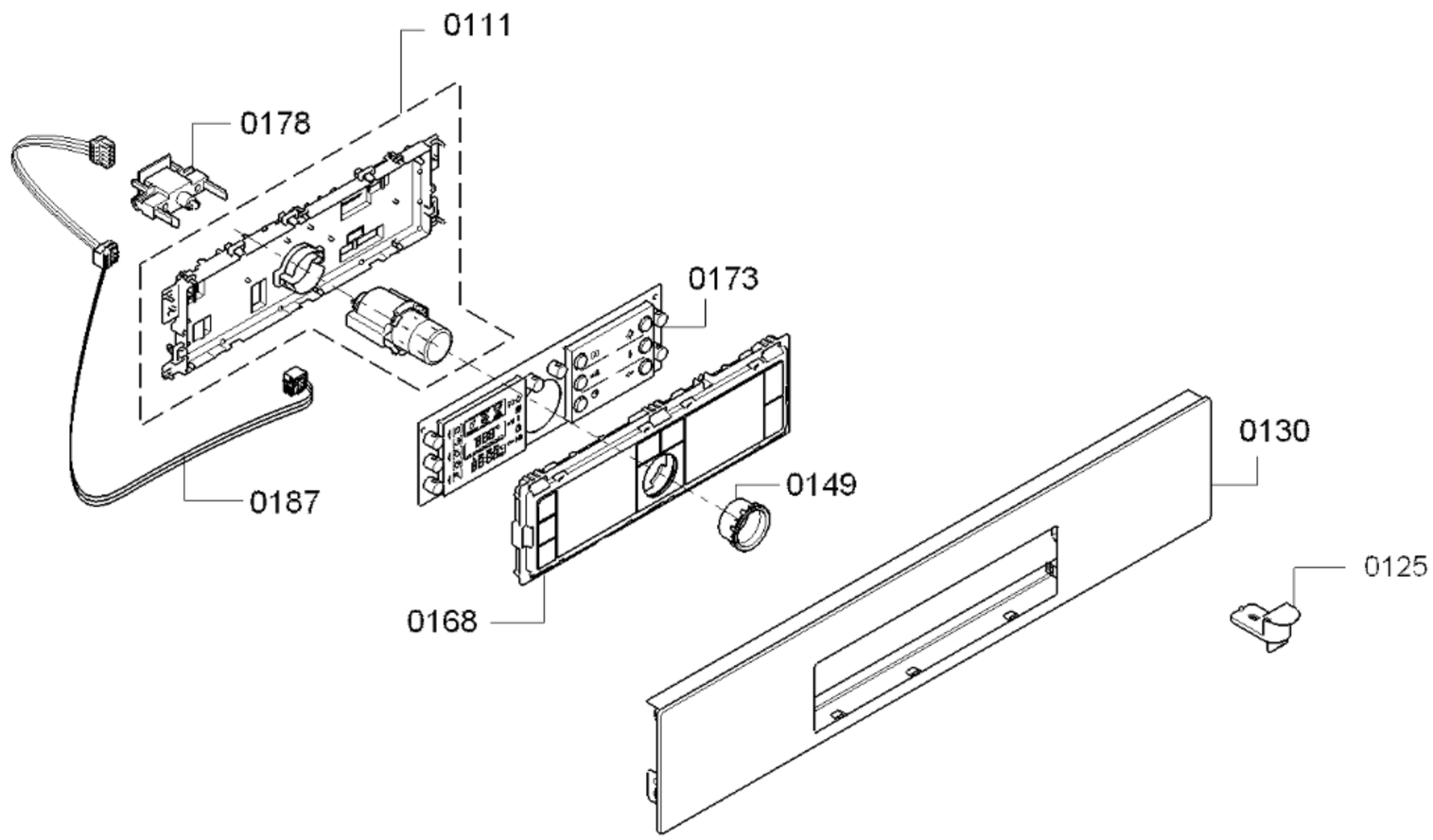

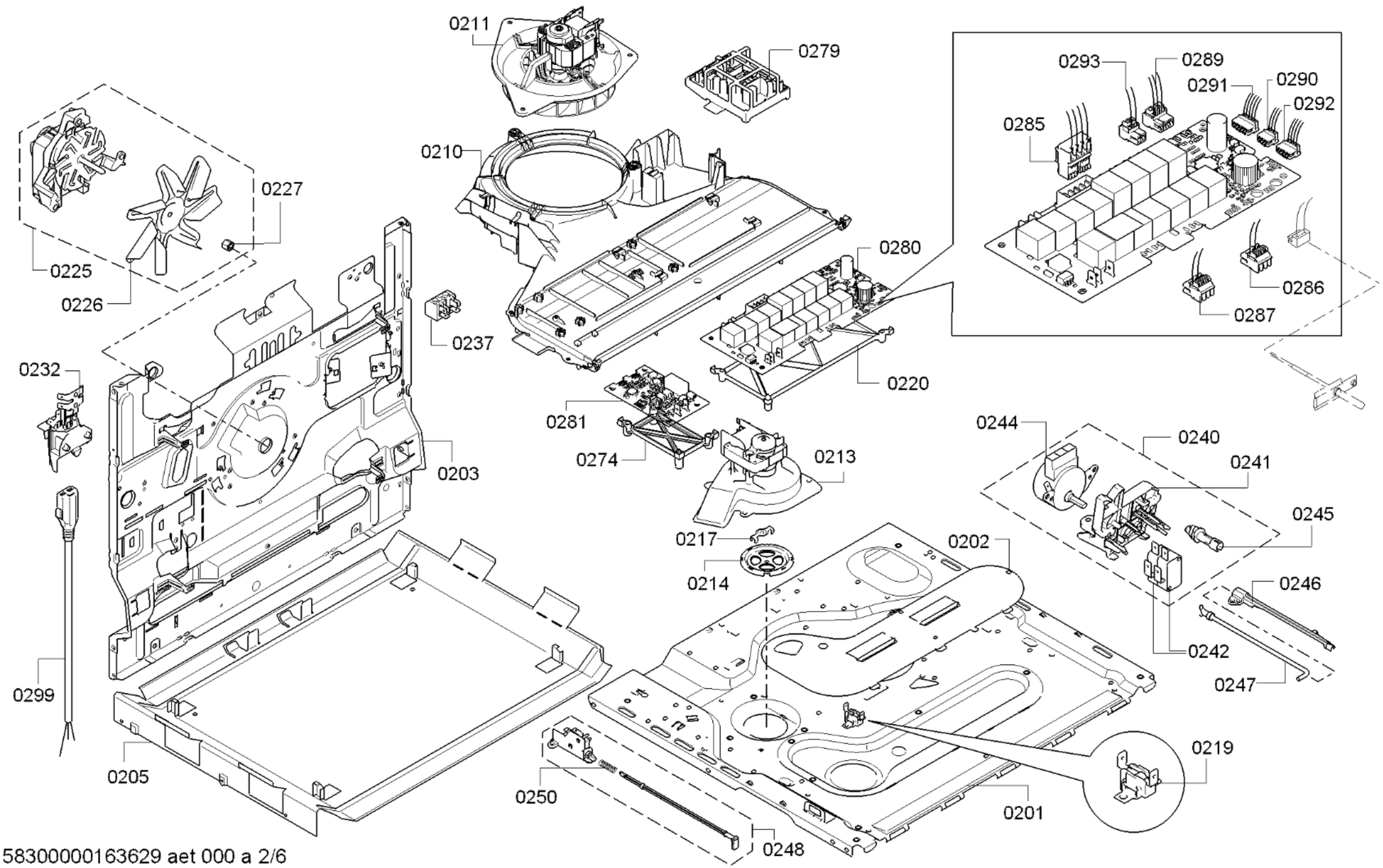

58300000163629 aet 000 a 2/6

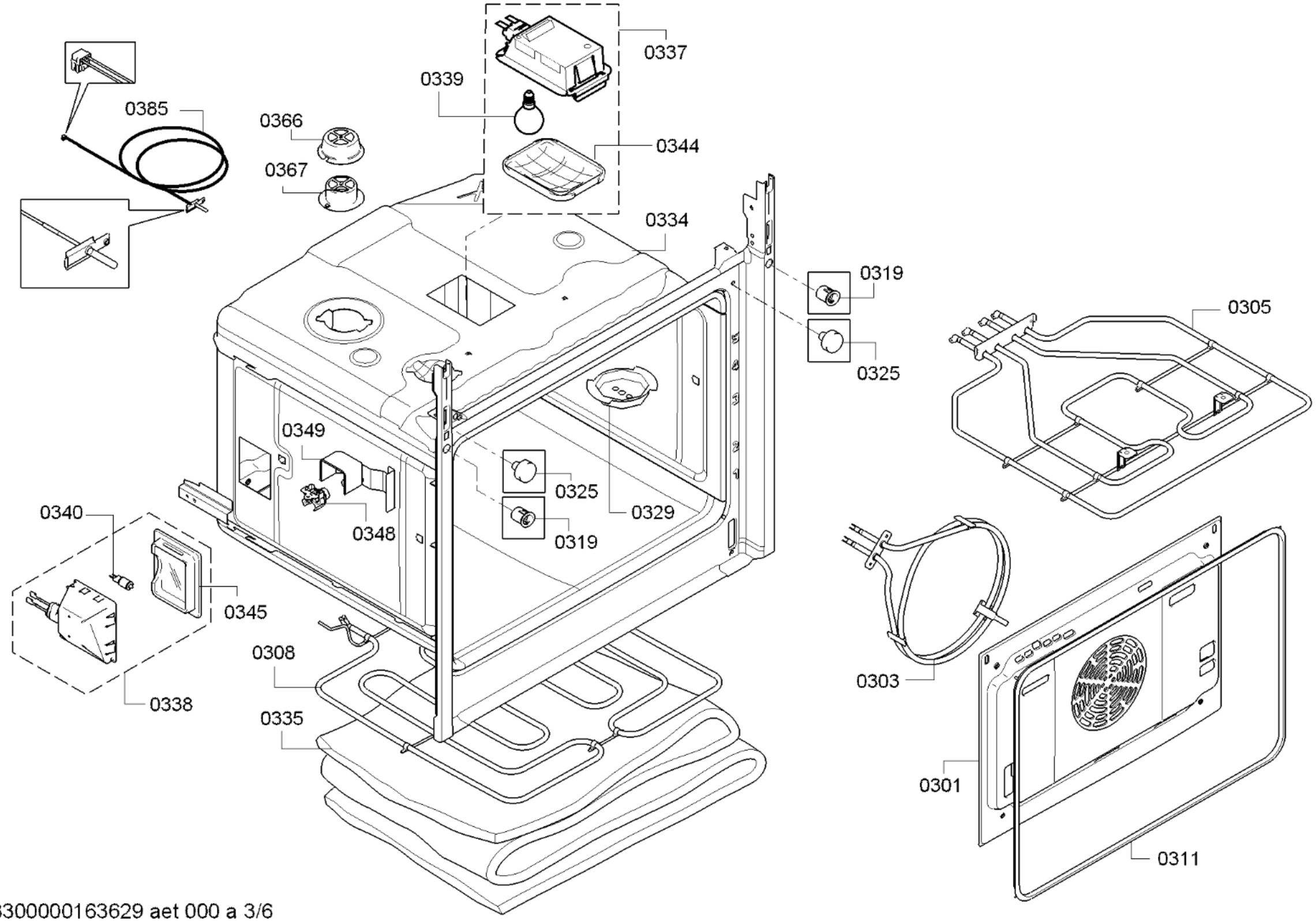

58300000163629 aet 000 a 3/6

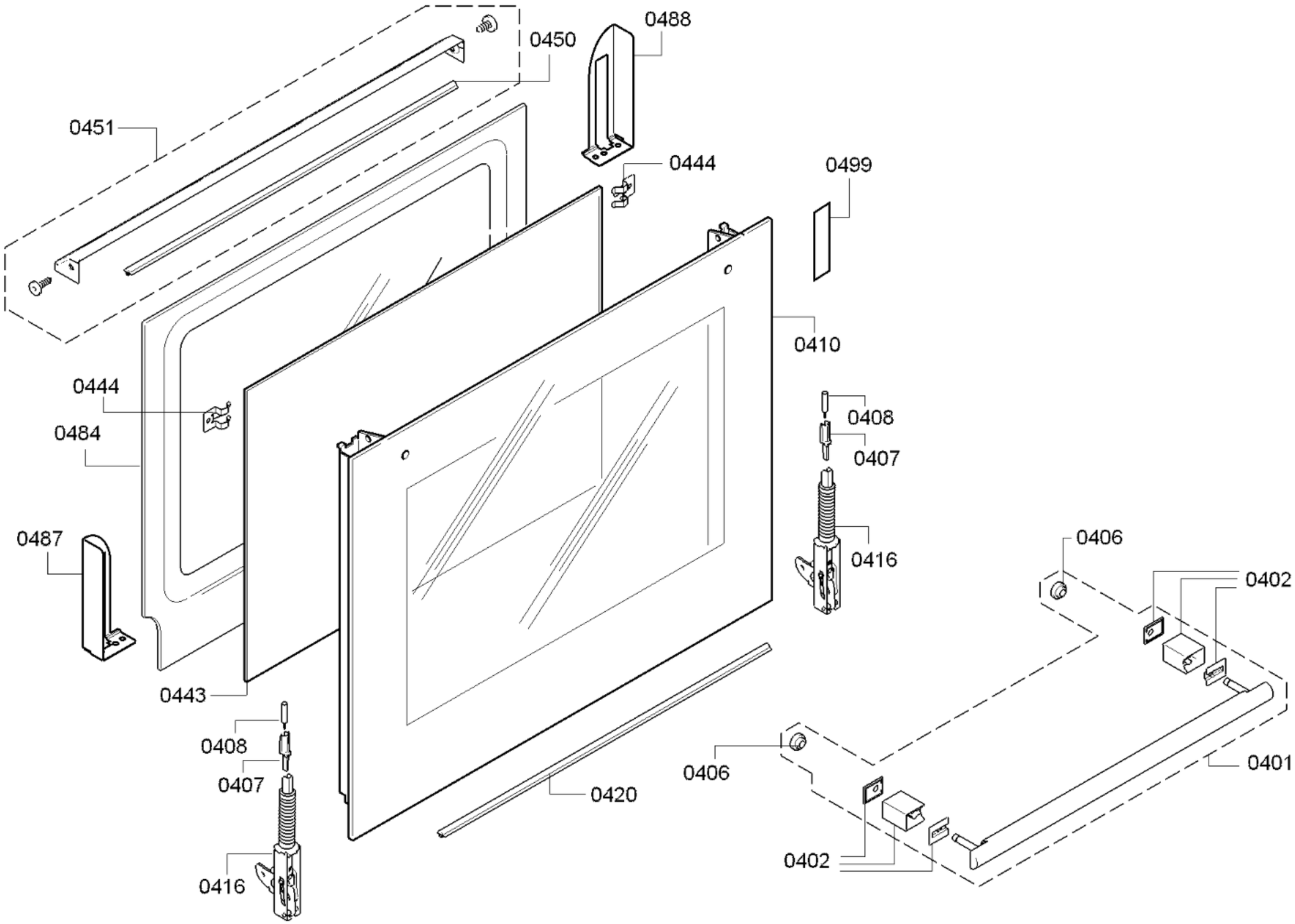

583000001636 29 aet 000 a 4/6

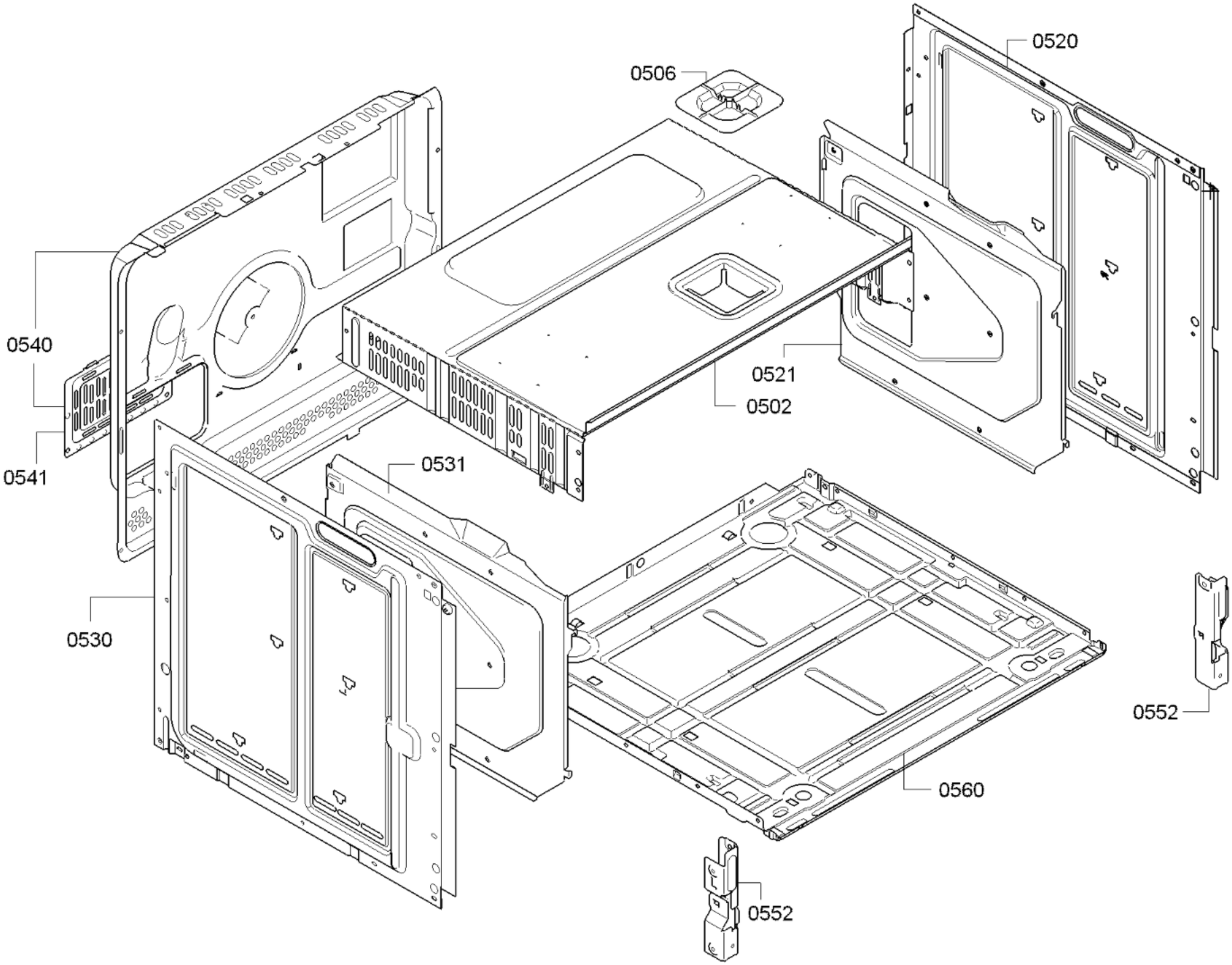

58300000163629 aet 000 a 5/6

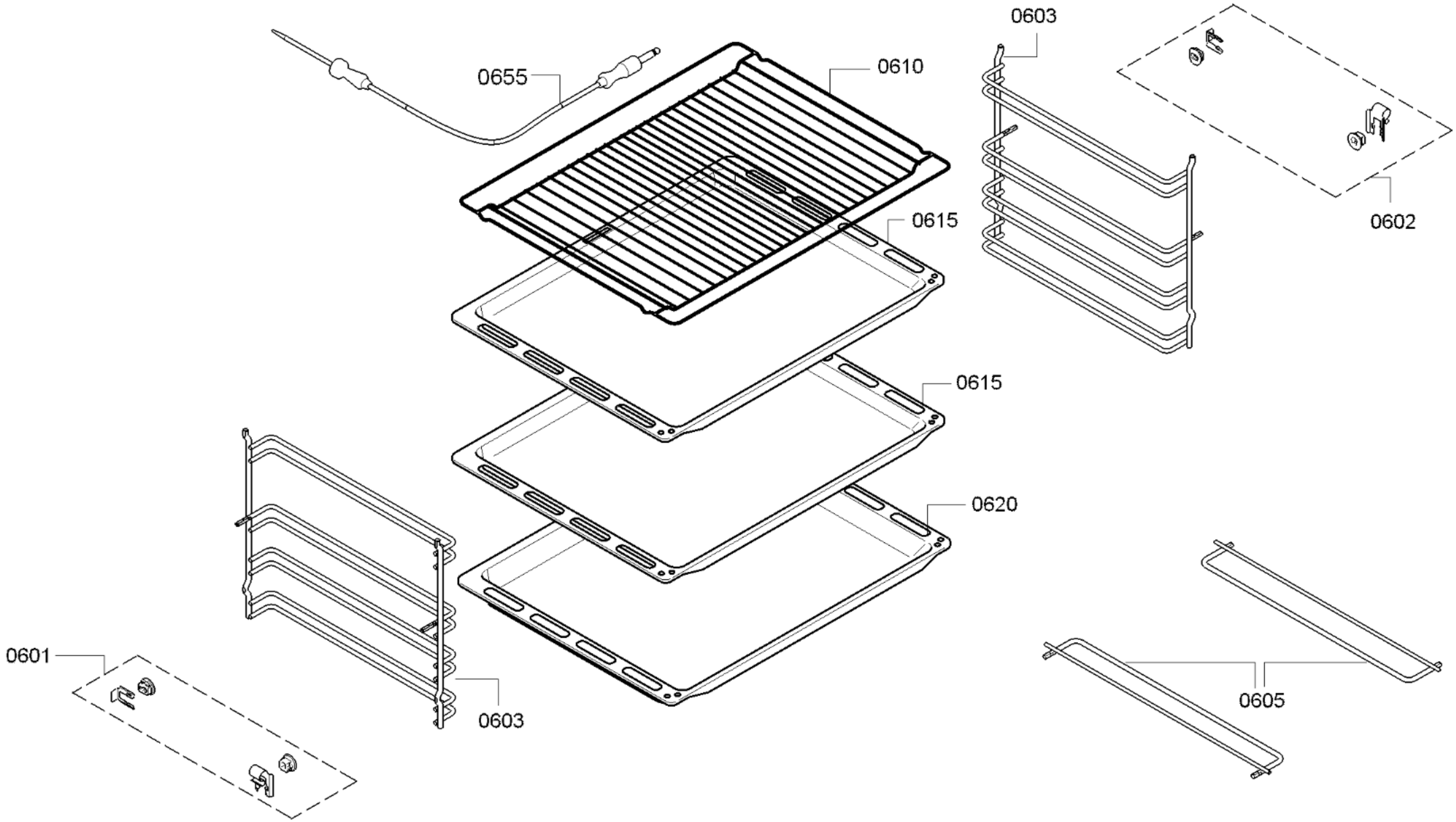

58300000163629 aet 000 a 6/6