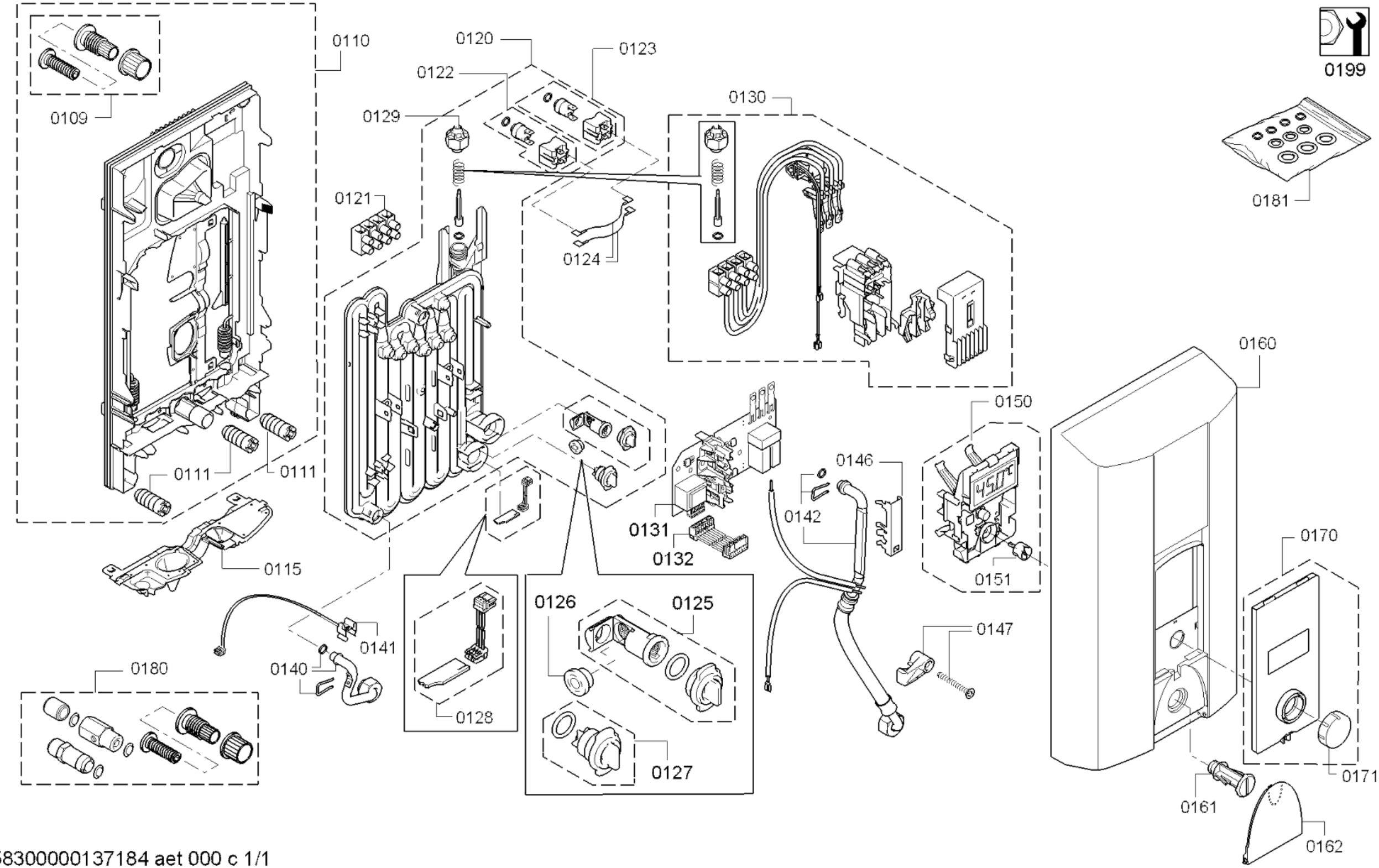

58300000137184 aet 000 c 1/1