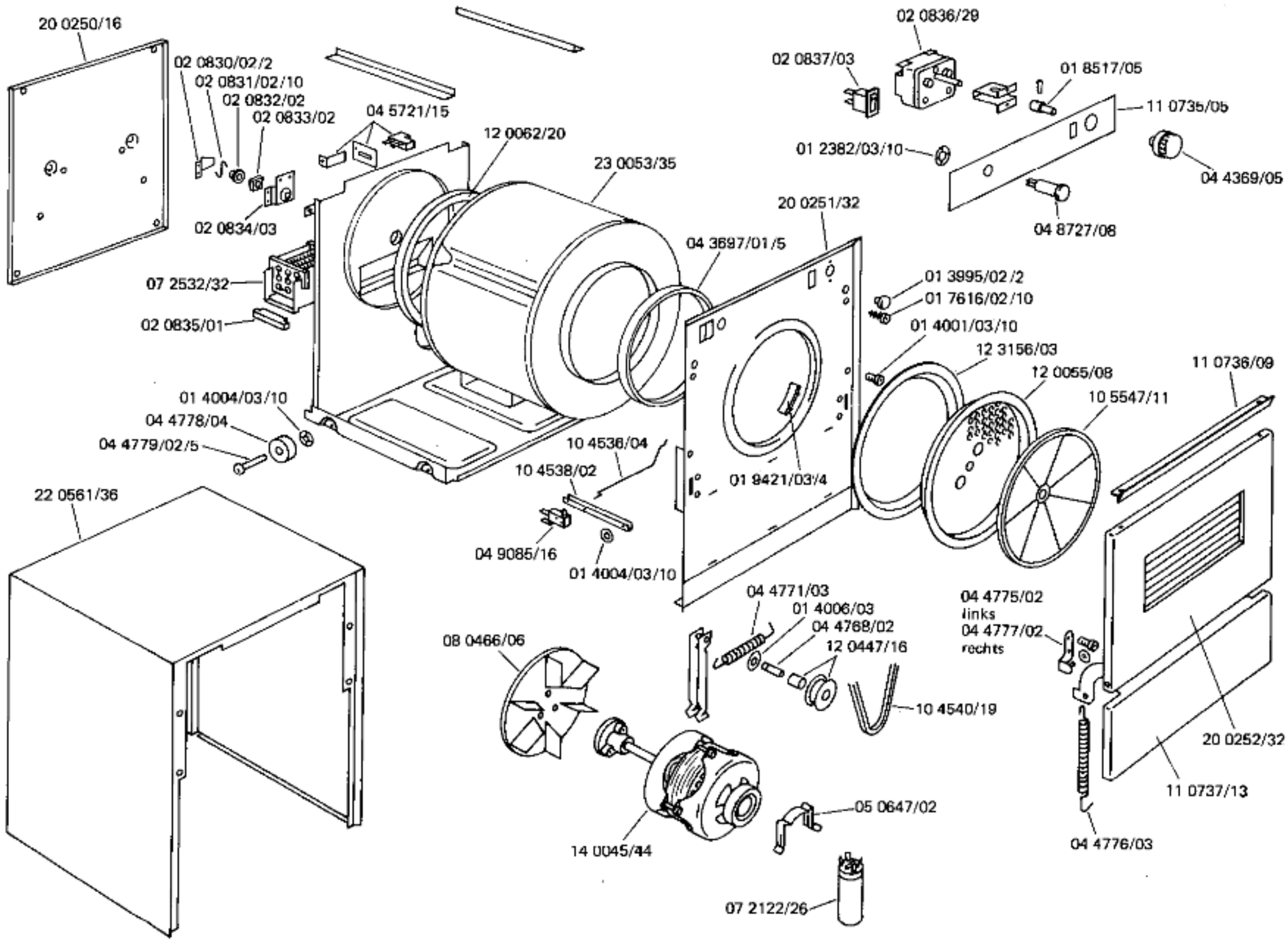
20 0250/16
02 0830/02/2
02 0831/02/10
02 0832/02
02 0833/02
04 5721/15
12 0062/20
23 0053/35
02 0836/29
02 0837/03
01 8517/05
11 0735/05
01 2382/03/10
04 4369/05
04 8727/08
20 0251/32
02 0834/03
04 3697/01/5
07 2532/32
01 3995/02/2
01 7616/02/10
02 0835/01
01 4001/03/10
12 3156/03
12 0055/08
11 0736/09
10 5547/11
01 4004/03/10
04 4778/04
04 4779/02/5
10 4536/04
10 4538/02
01 9421/03/4
22 0561/36
04 9085/16
01 4004/03/10
04 4771/03
01 4006/03
04 4768/02
12 0447/16
04 4775/02
links
04 4777/02
rechts
08 0466/06
10 4540/19
20 0252/32
11 0737/13
05 0647/02
14 0045/44
04 4776/03
07 2122/26

120115-1/1