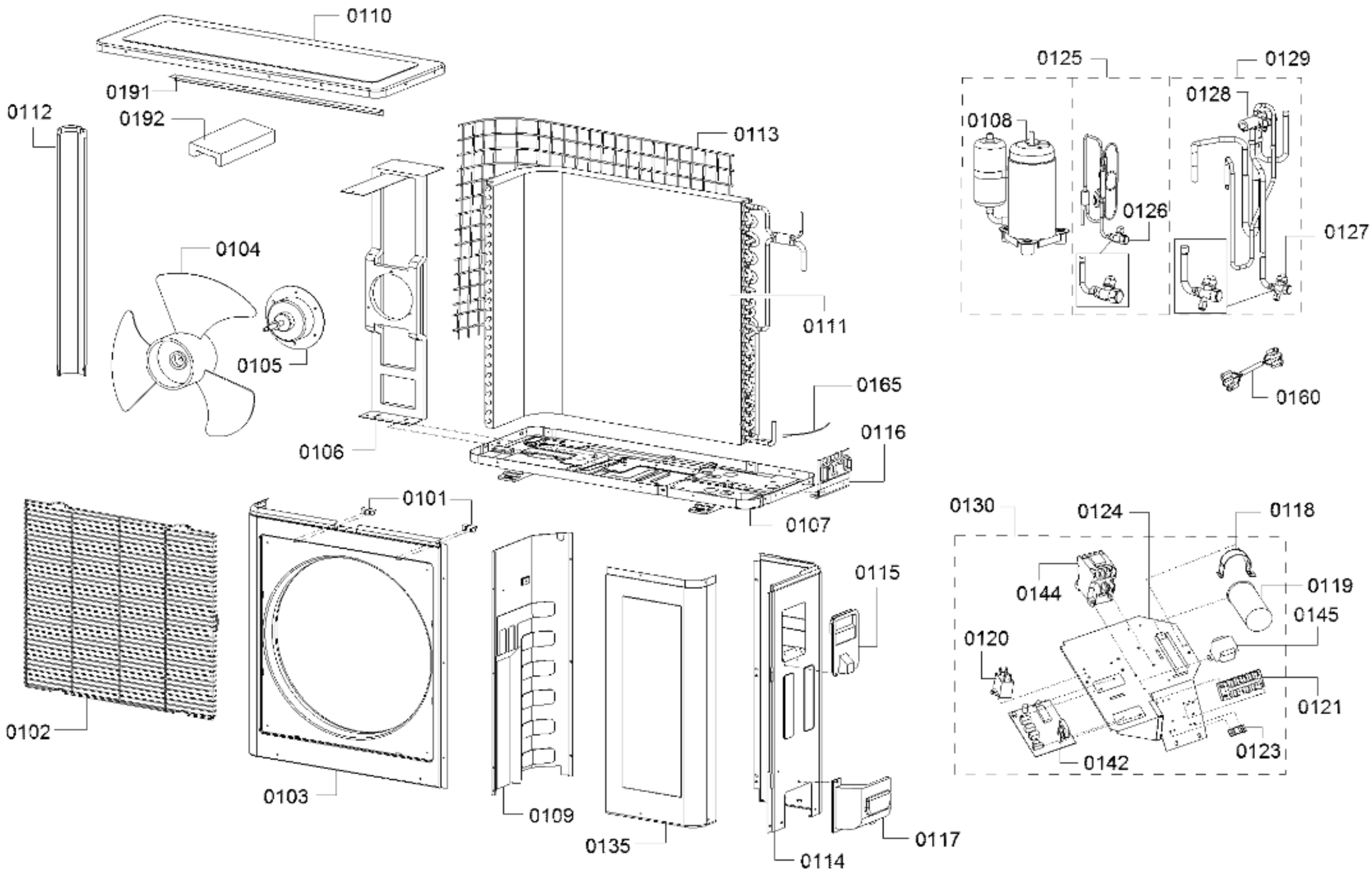

58300000171475 aet 000 b 1/1