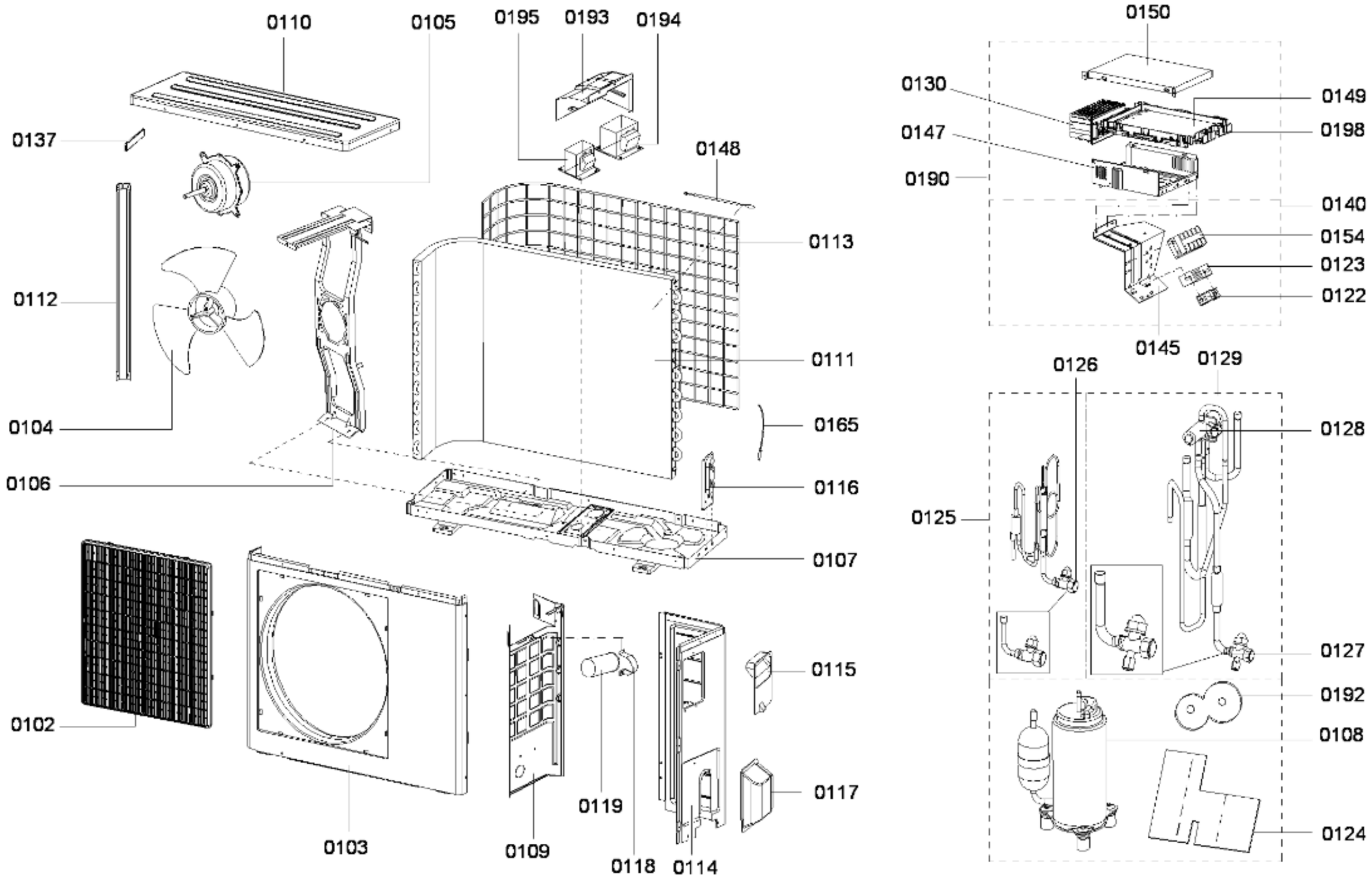

583000001 41085 aet 000 b 1/1