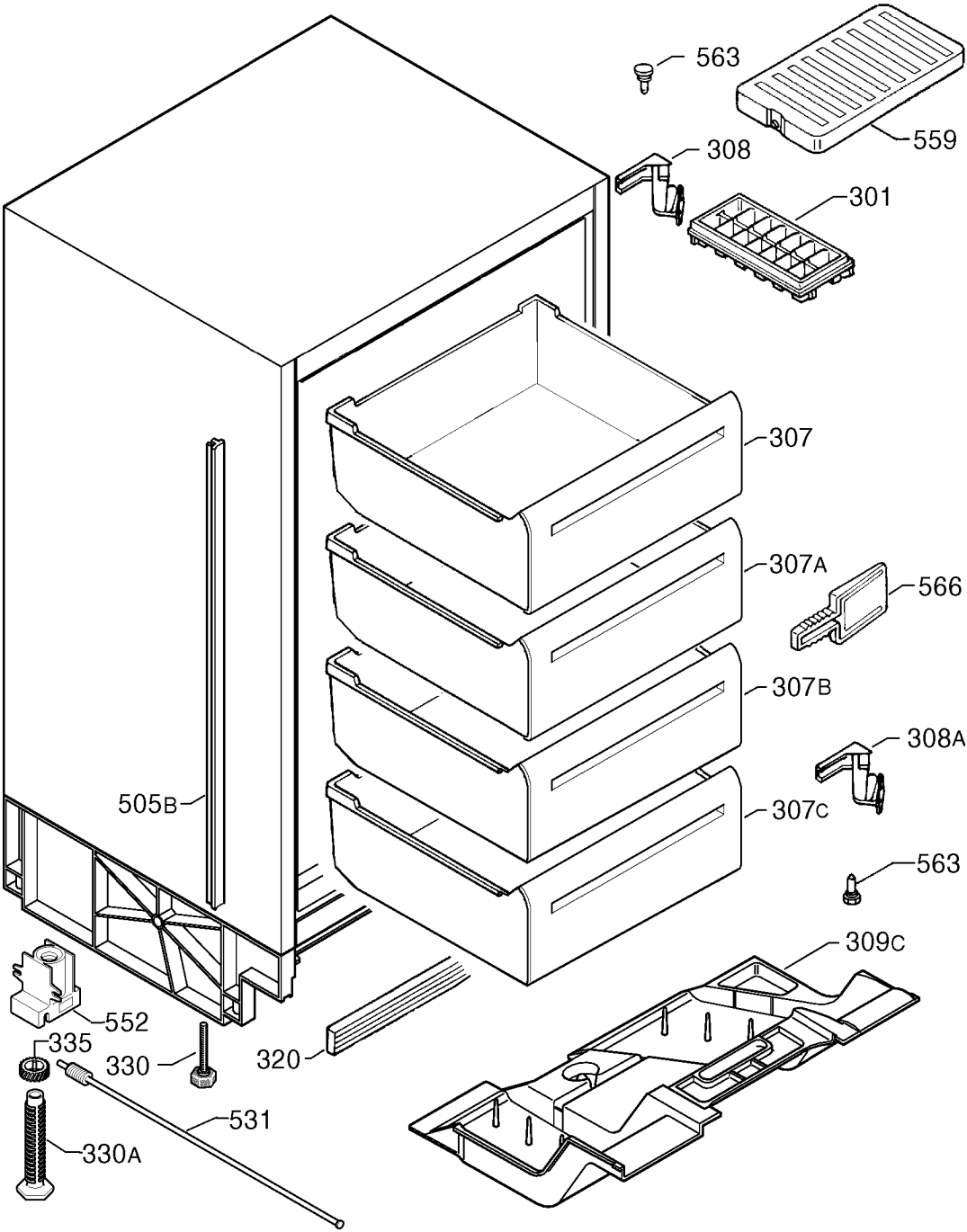


P09223010362