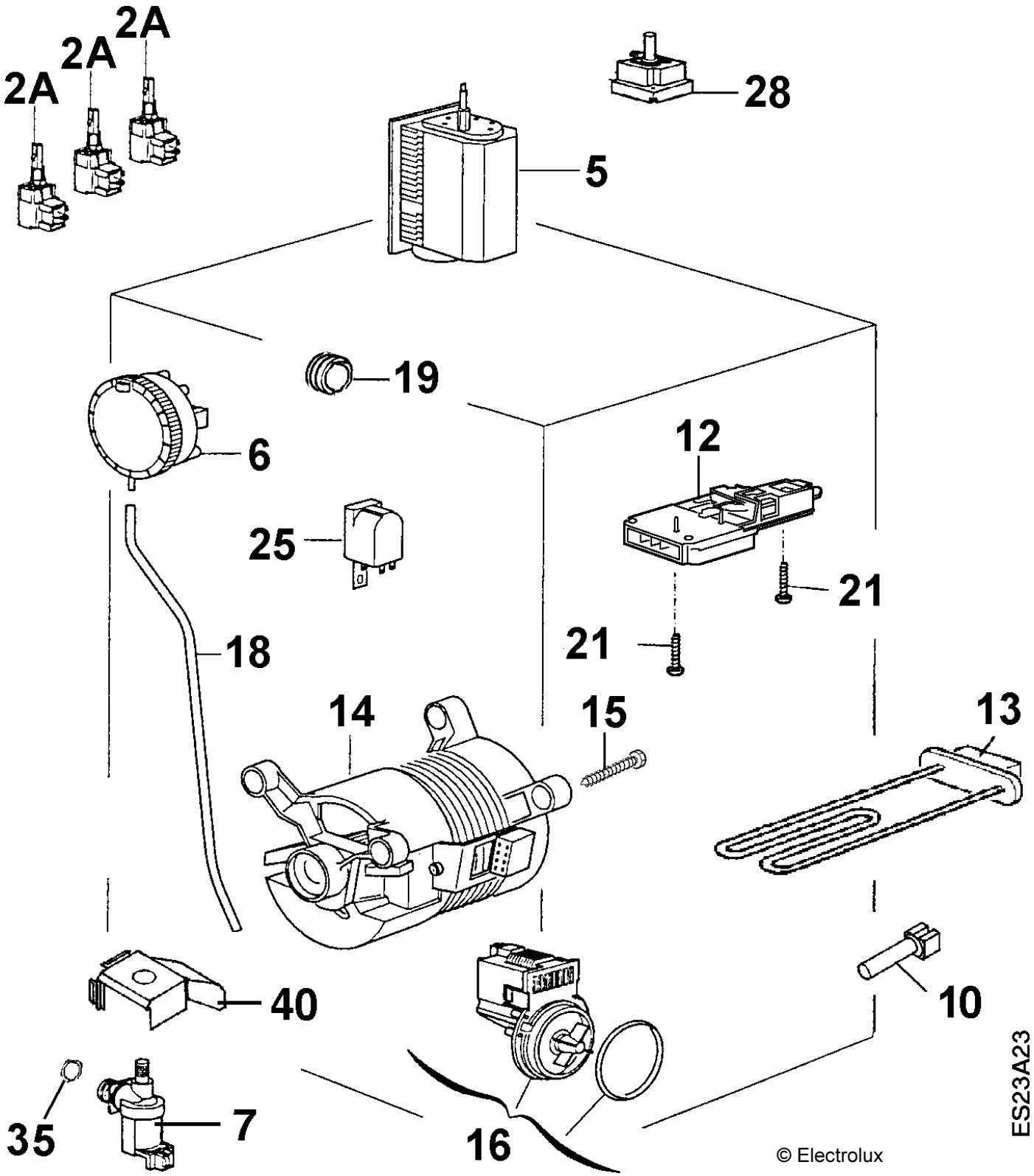
2A
2A
2A
28
5
19
6
12
25
21
21
18
14
15
13
40
10
35
7
16
ES23A23
© Electrolux