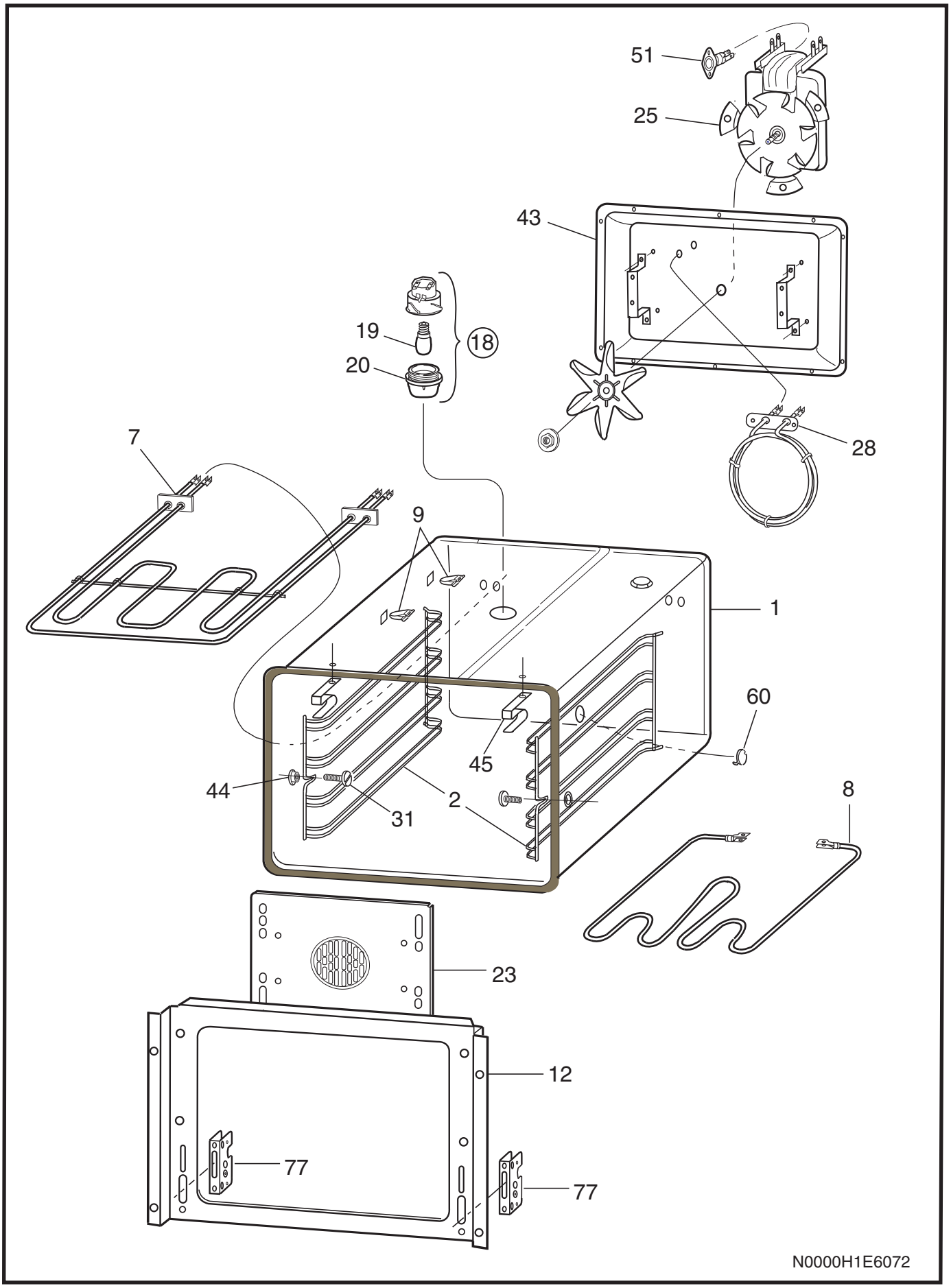
51
25
43
19
18
20
7
28
9
1
60
45
44
31
2
8
23
12
77
77
N0000H1E6072