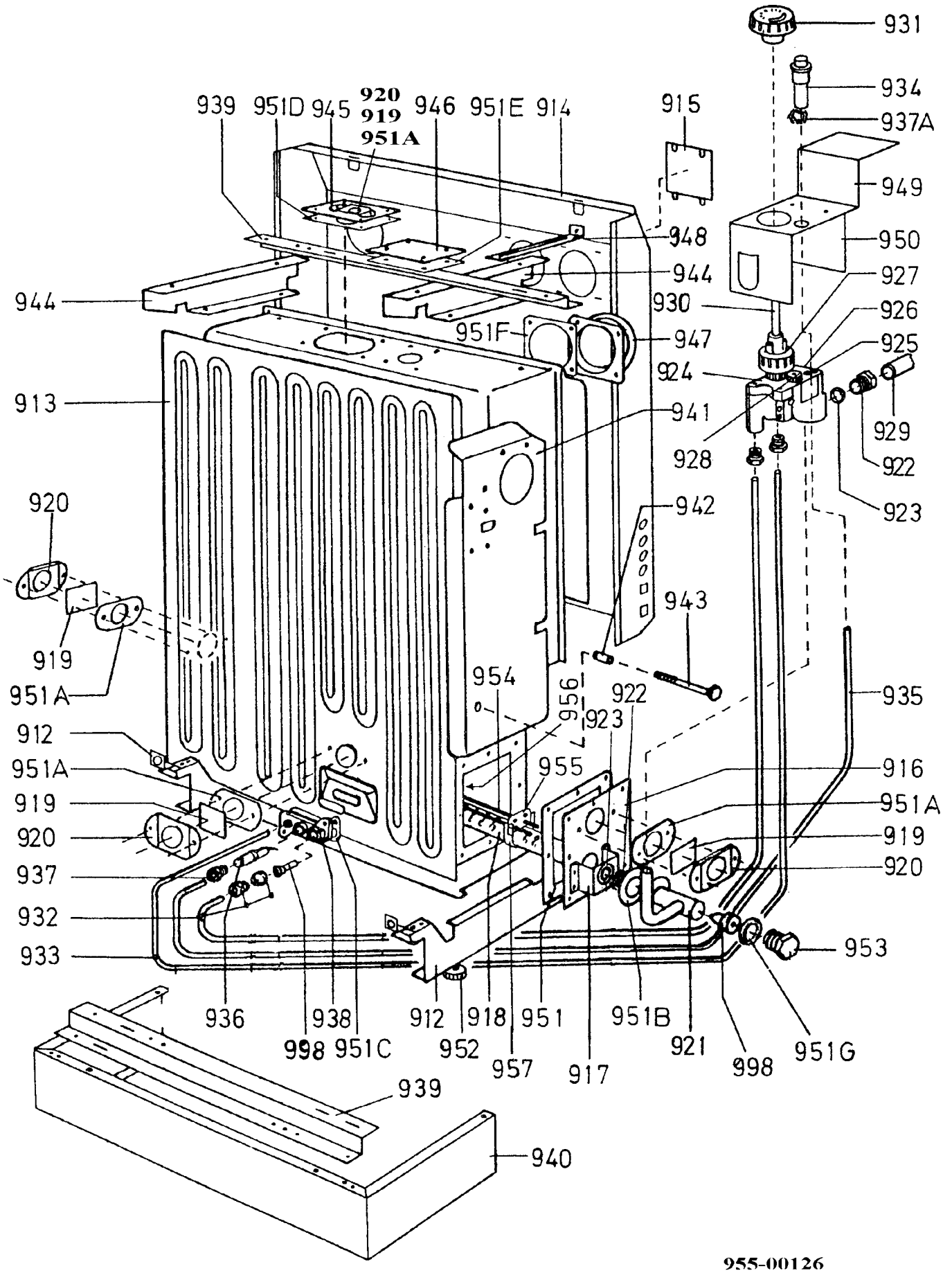
931
934
937A
939
951D
945
920
919
951A
946
951E
914
915
949
948
950
944
927
944
930
926
951F
947
925
924
913
941
929
928
922
920
942
923
943
919
951A
954
956
922
935
912
923
951A
955
916
919
951A
920
919
937
920
932
953
933
936
938
912
918
951
951B
998
951C
952
957
917
921
998
951G
939
940
955-00126