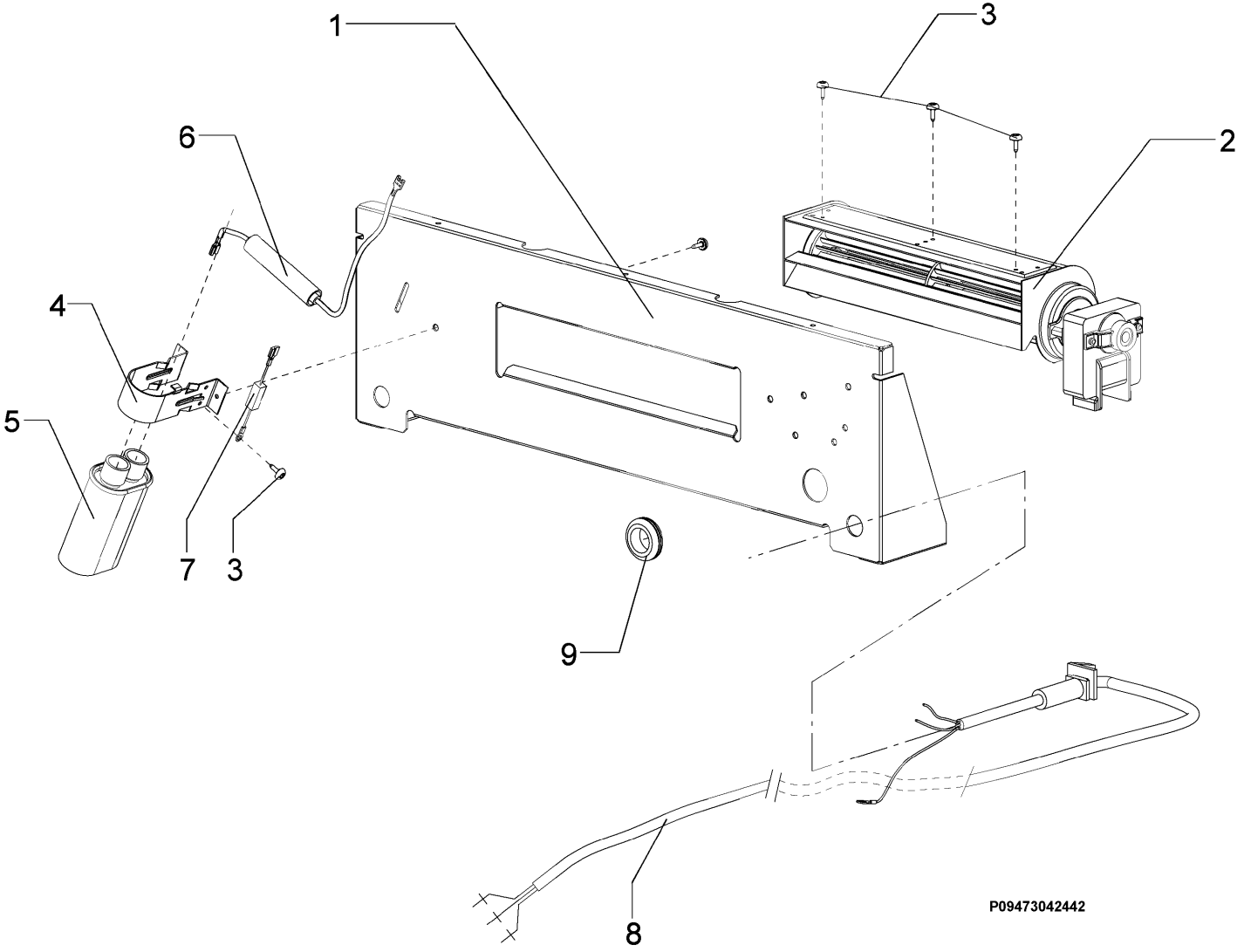
1
3
2
6
4
5
7
3
9
8
P09473042442