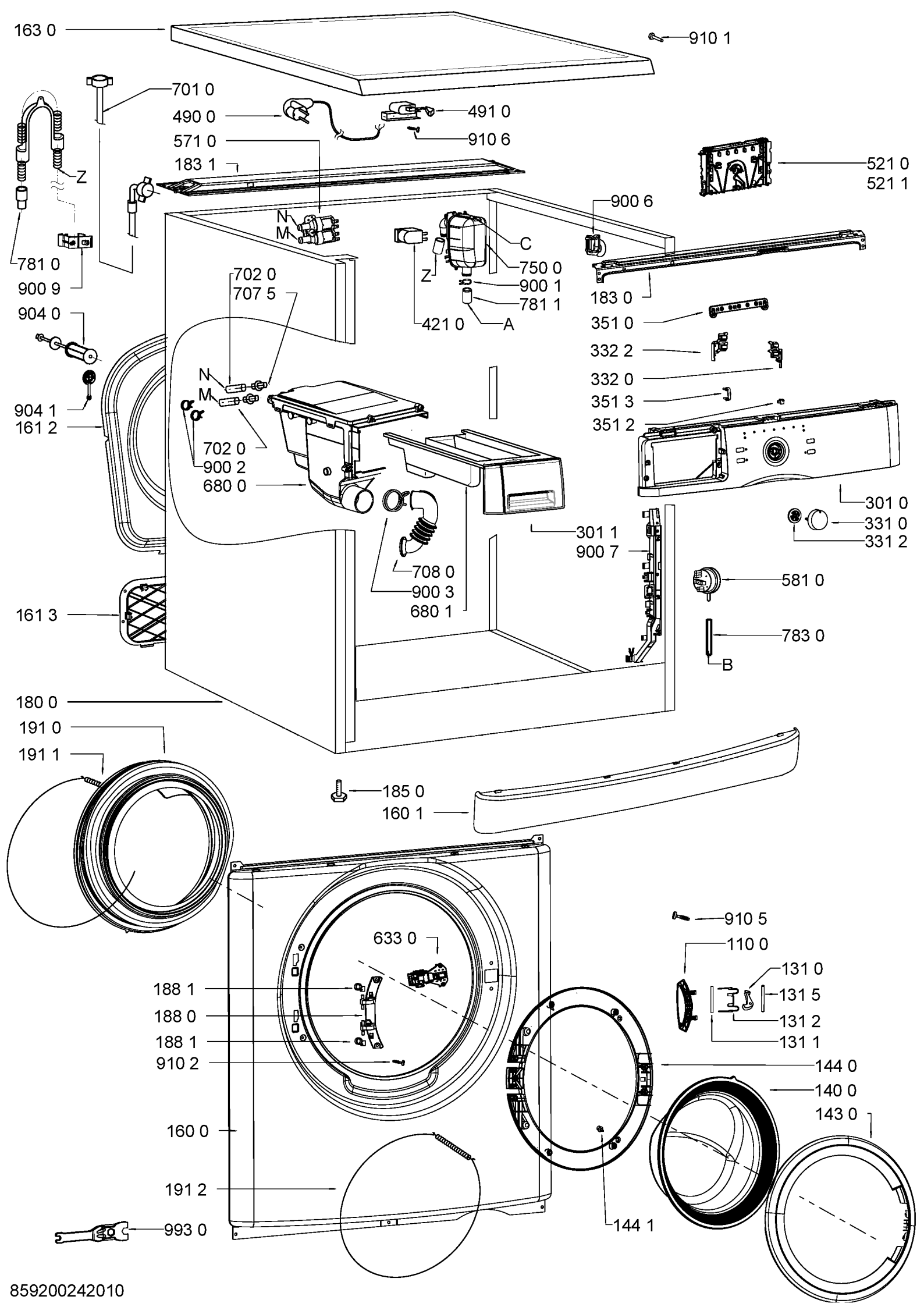

859200242010