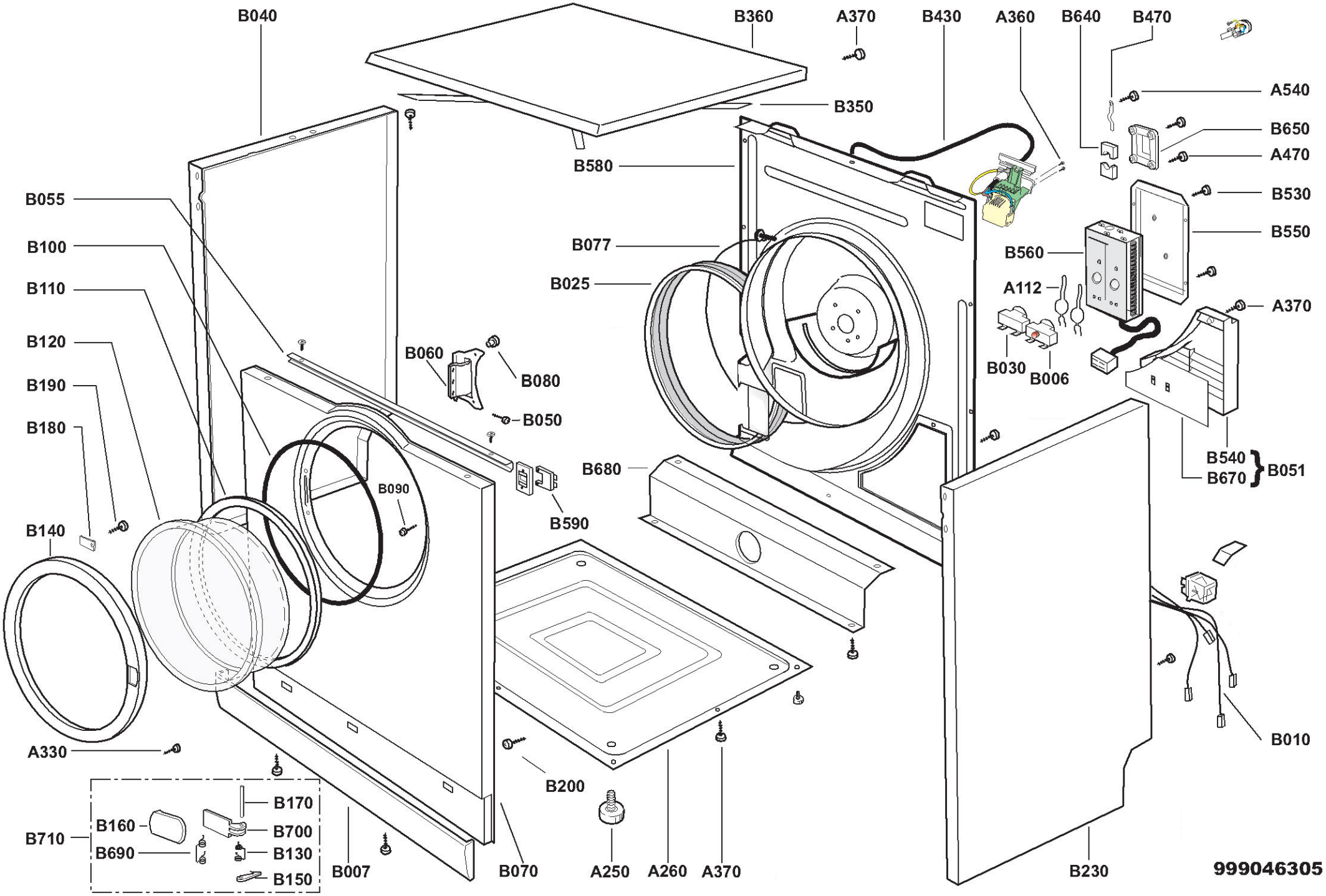
B040
B360
A370
B430
A360
B640
B470
A540
B350
B650
A470
B580
B530
B055
B550
B100
B077
B560
B110
B025
A112
A370
B120
B060
B080
B030
B006
B190
B050
B180
B540
B670
B051
B680
B090
B590
B140
B010
A330
B200
B170
B160
B700
B710
B690
B130
B150
B007
B070
A250
A260
A370
B230
999046305