Outdoor Unit

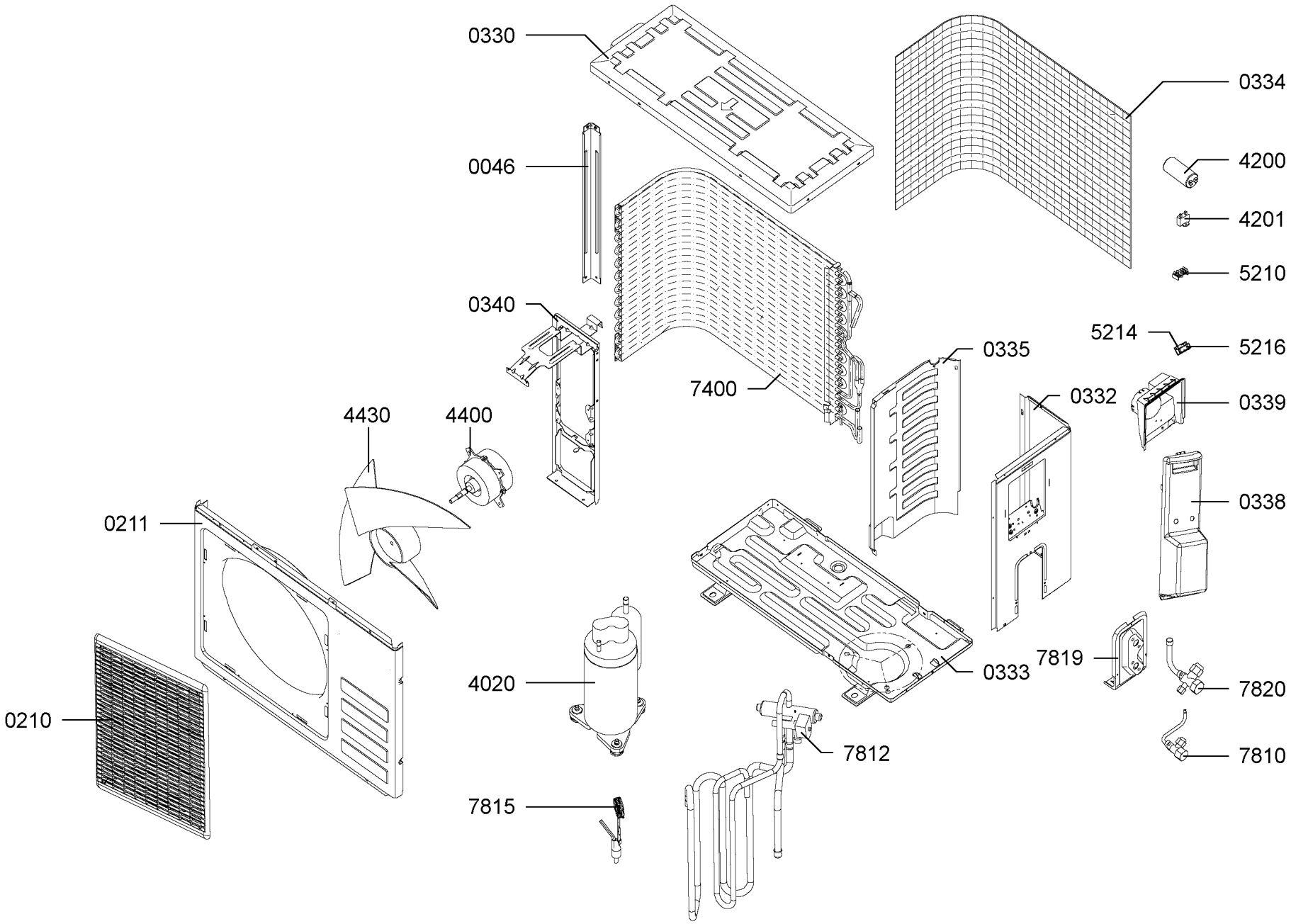

06000246