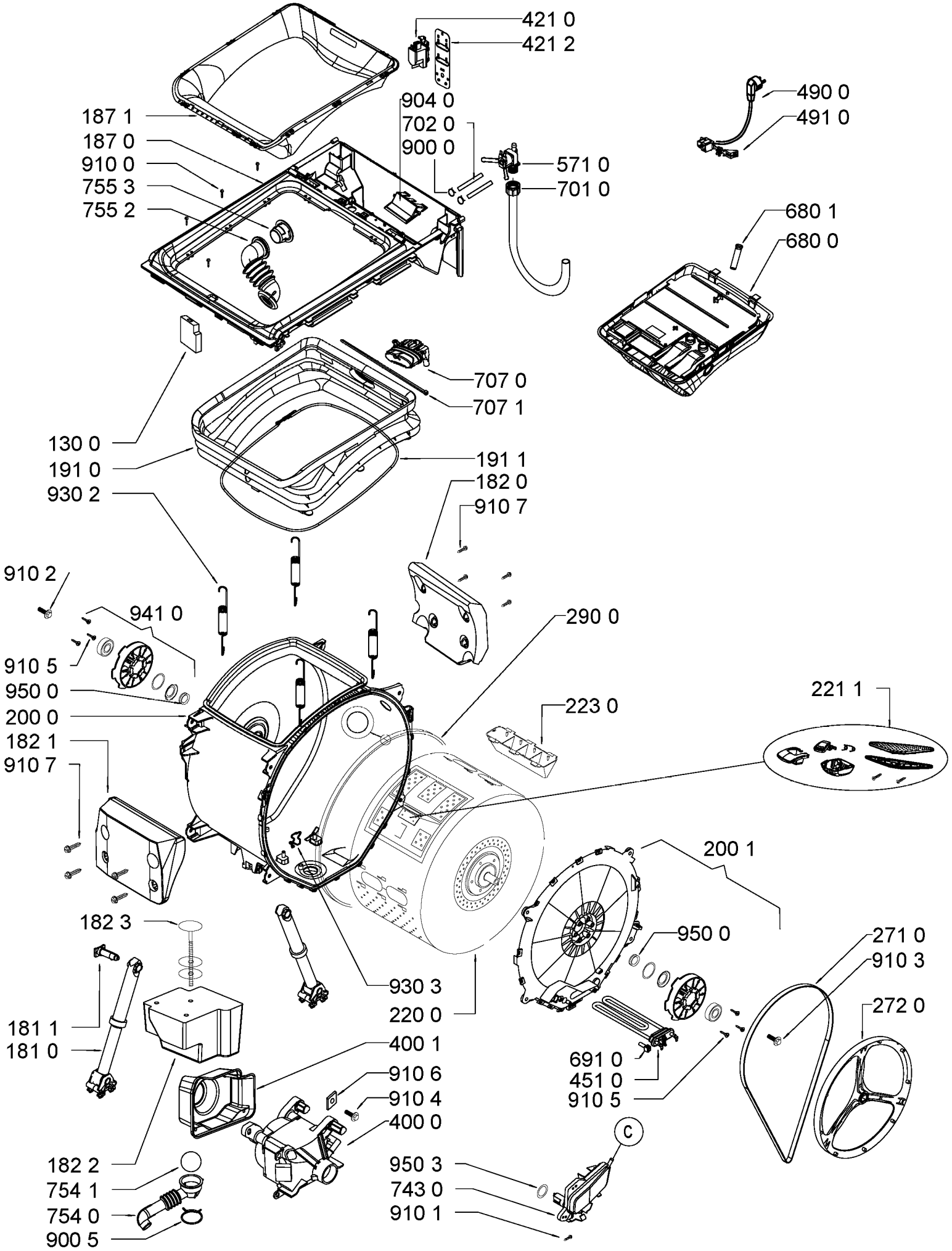

859363126020