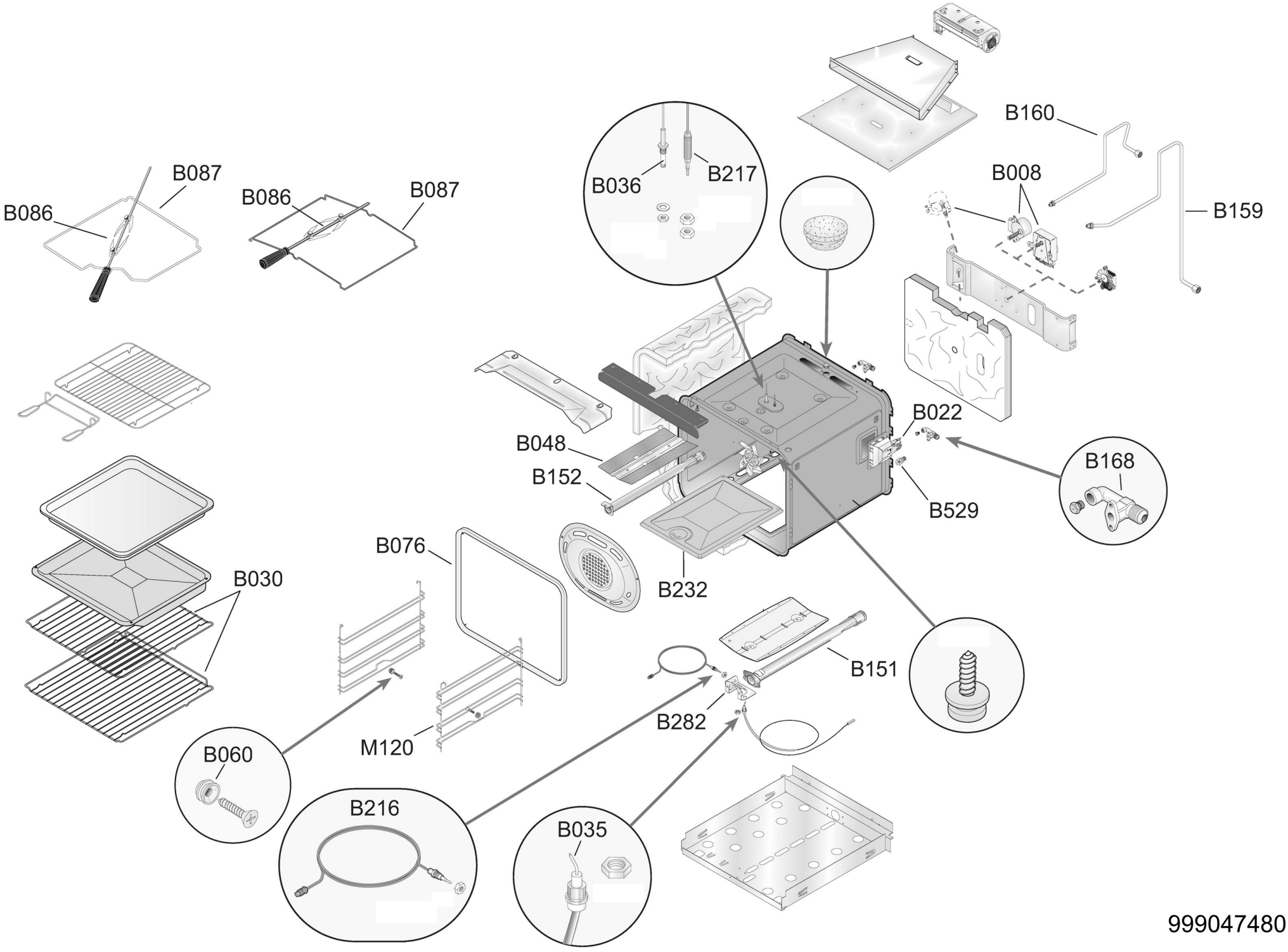
B087
B086
B086
B087
B036
B217
B160
B008
B159
B022
B168
B048
B152
B529
B076
B030
B232
B151
B282
M120
B060
B216
B035

999047480