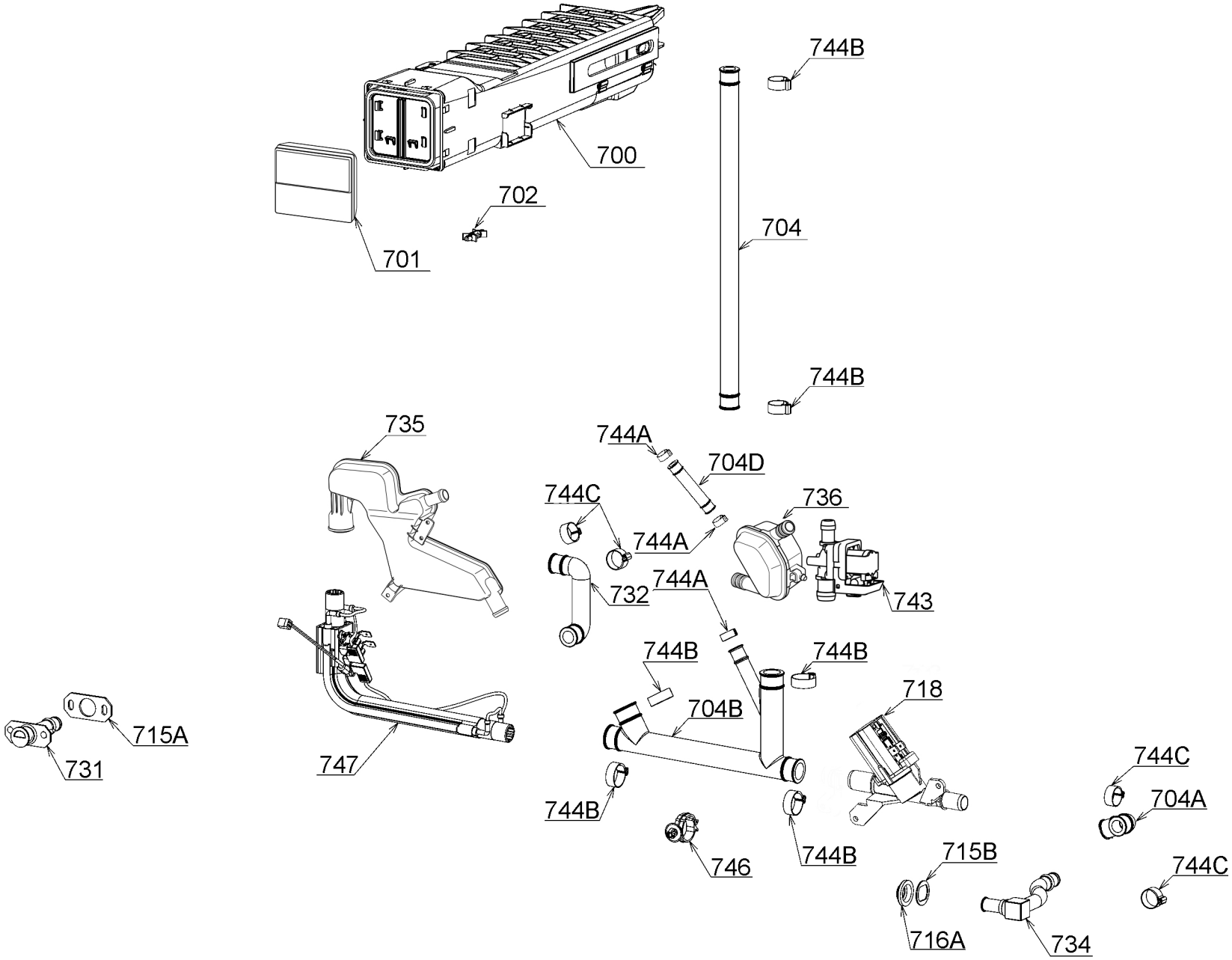

P00003163763