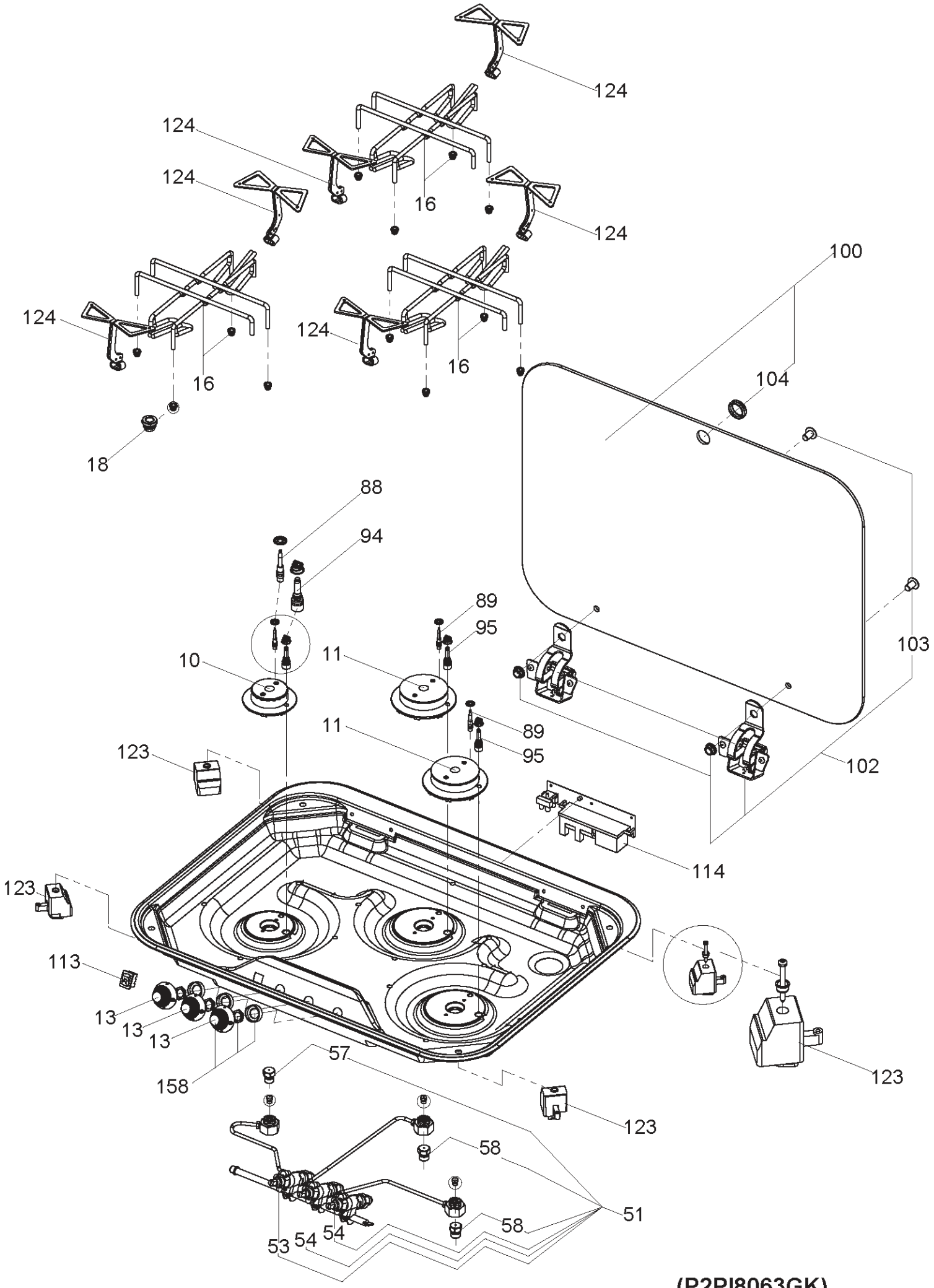

(P2PI8063GK)
(WPI8063_00005)