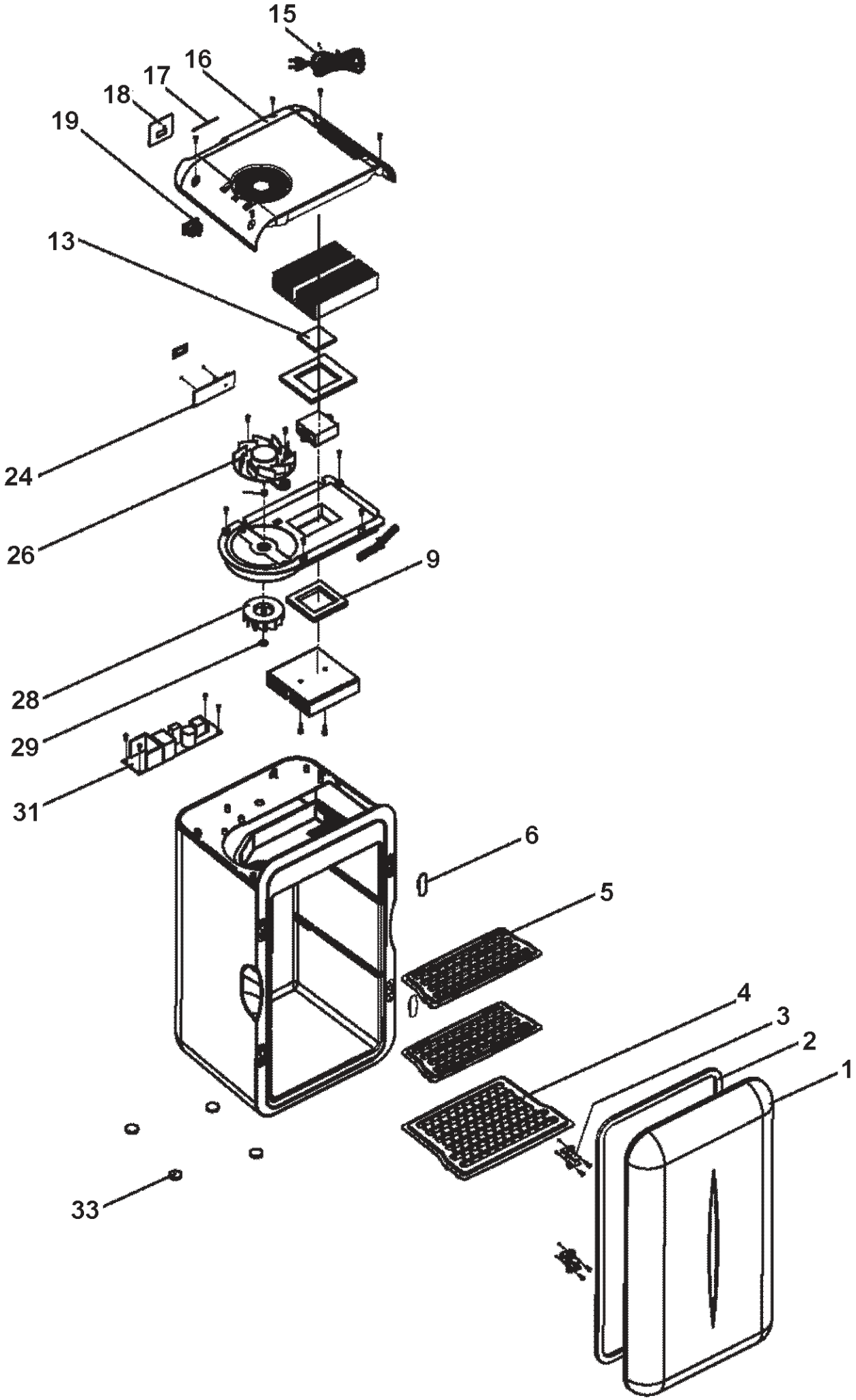

(P000F16GK)