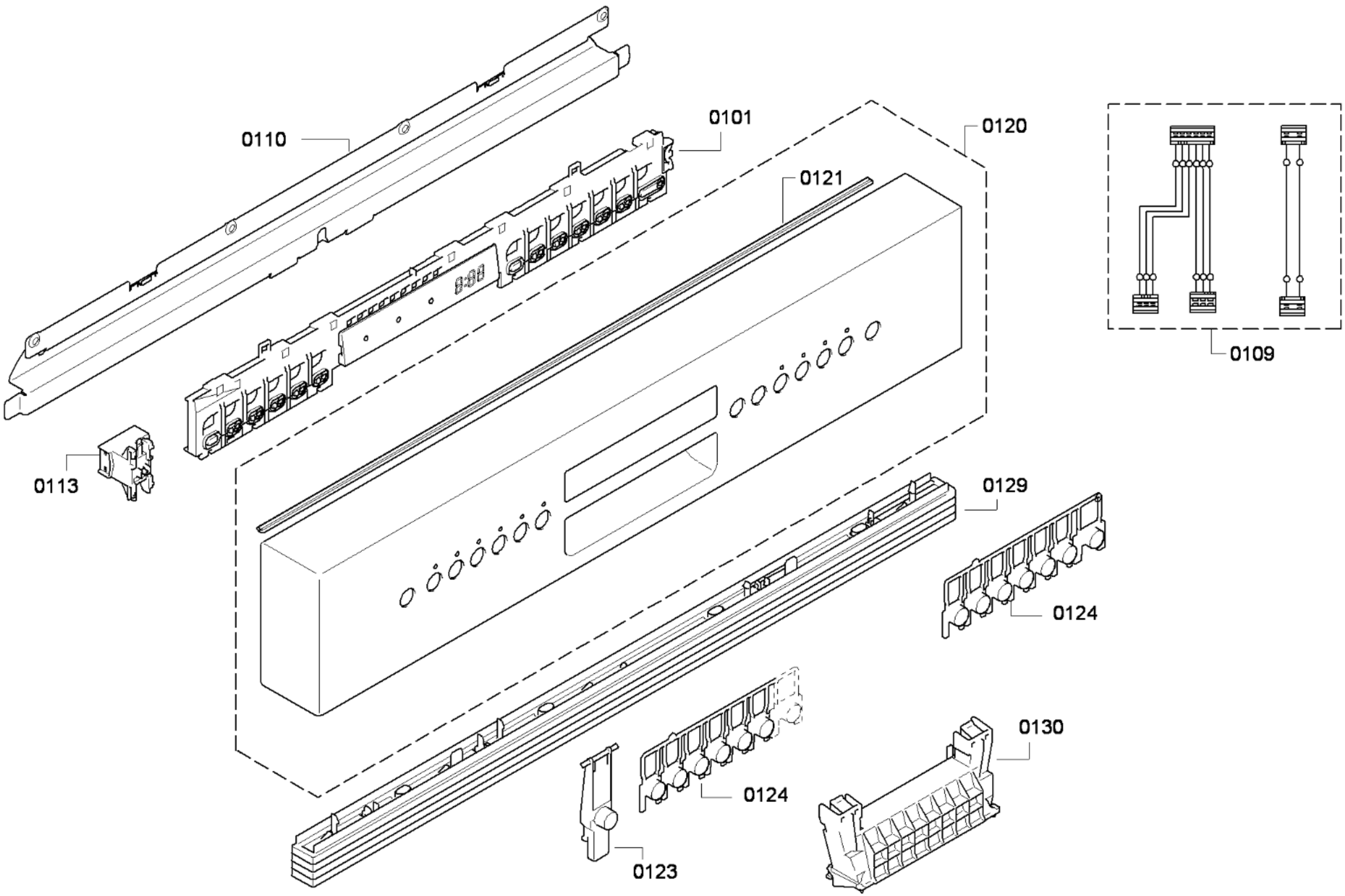

58300000141117 aet 000 a 1/6

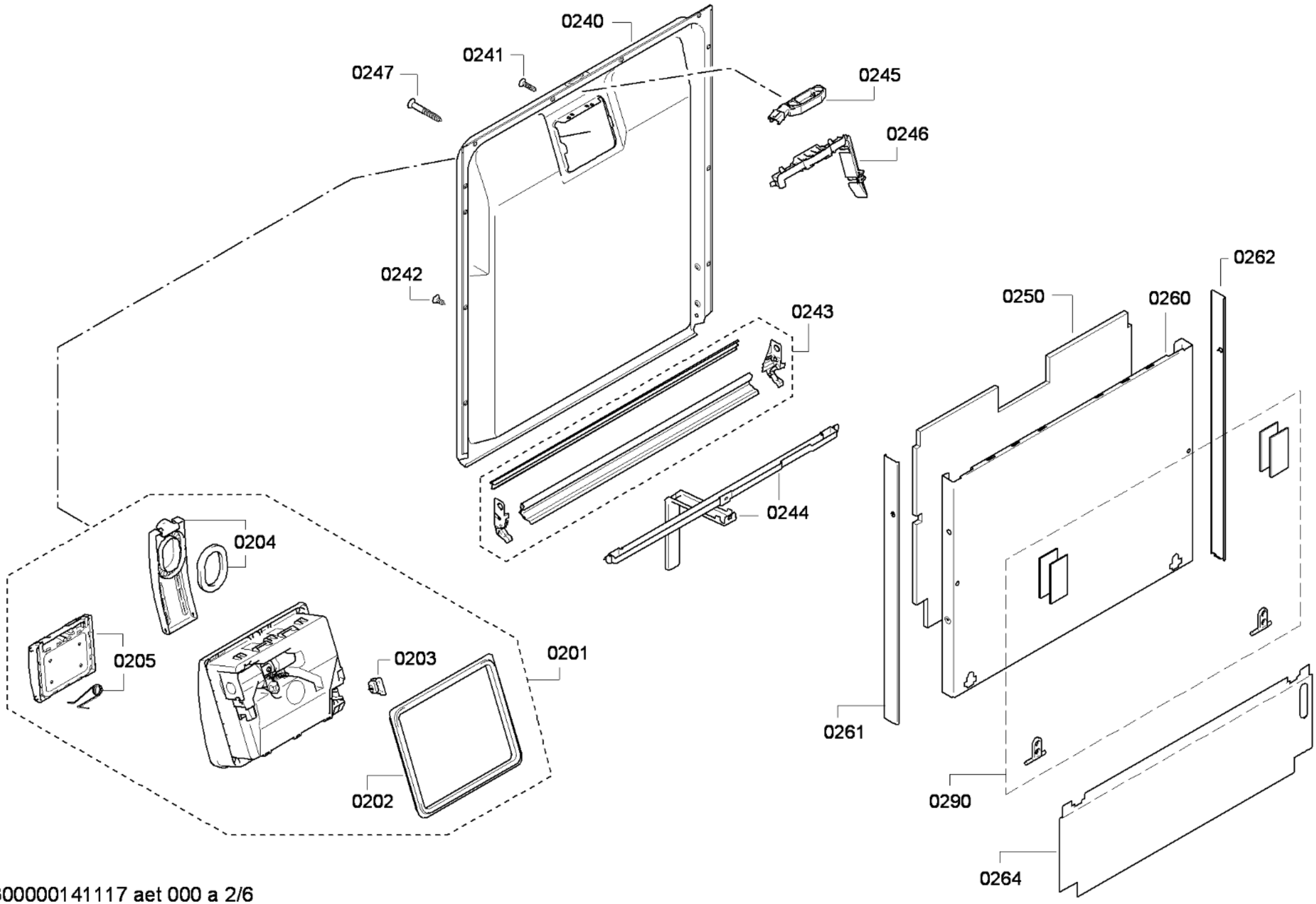

58300000141117 aet 000 a 2/6

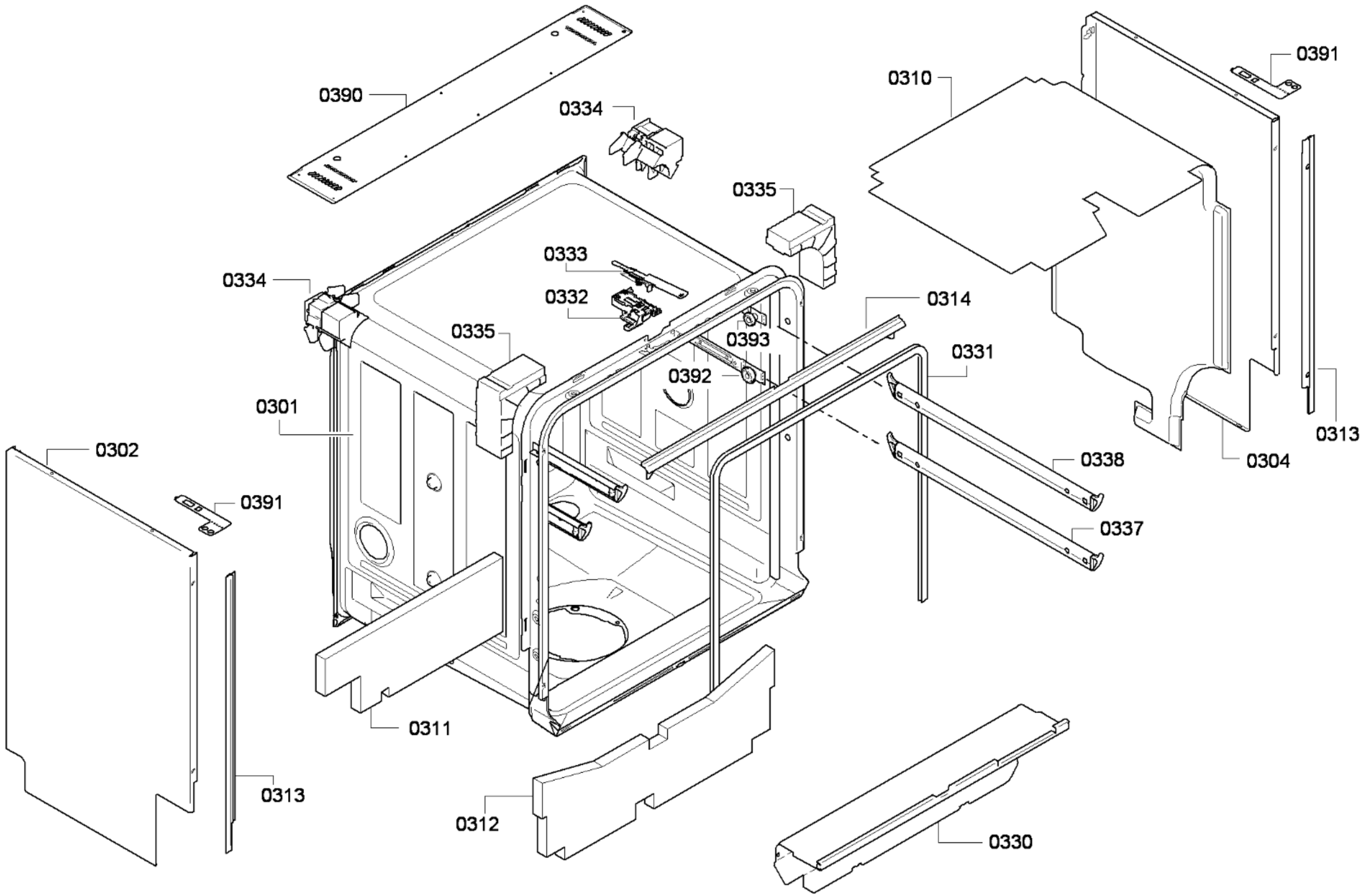

58300000141117 aet 000 a 3/6

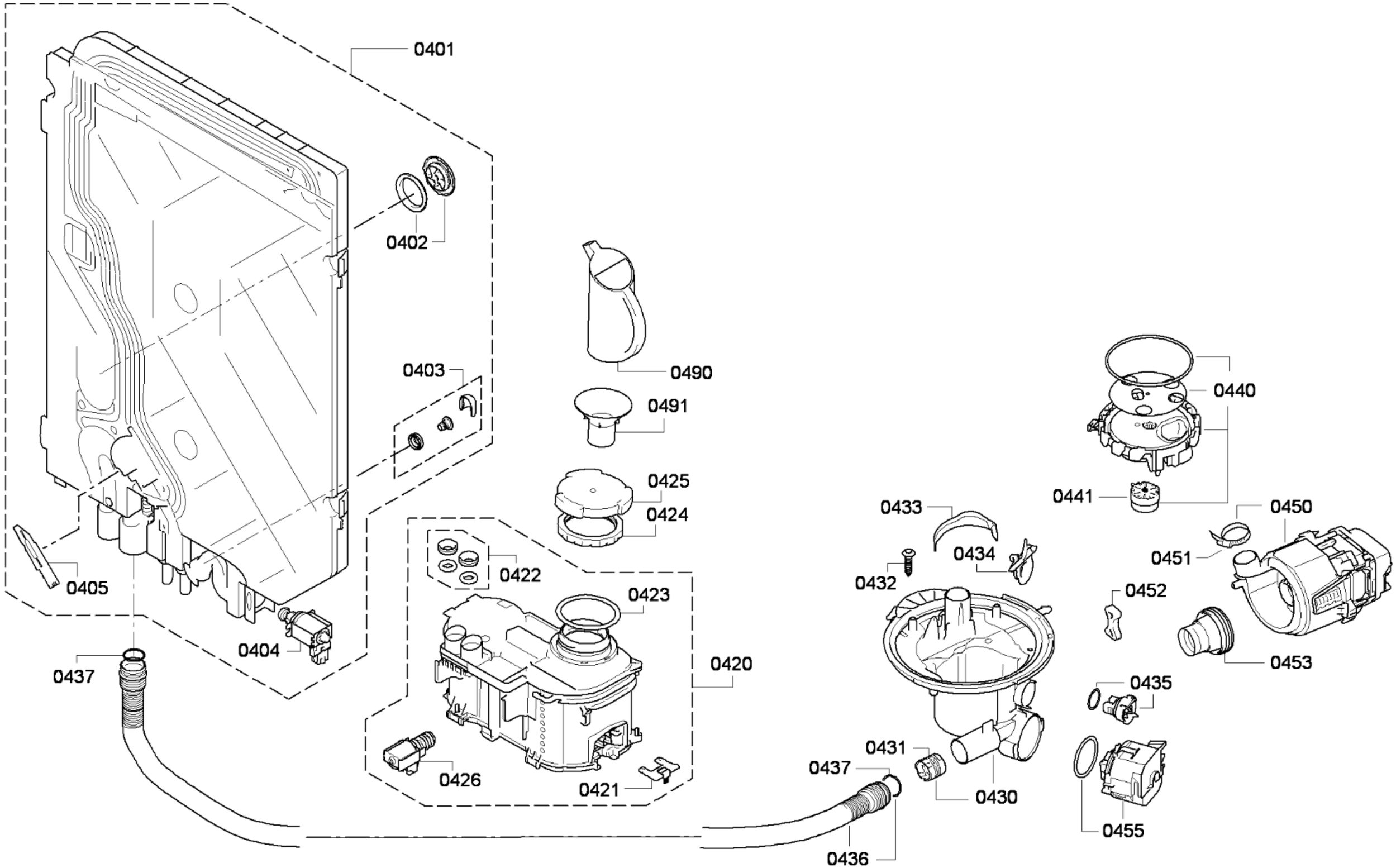

583000001411 7 aet 000 a 4/6

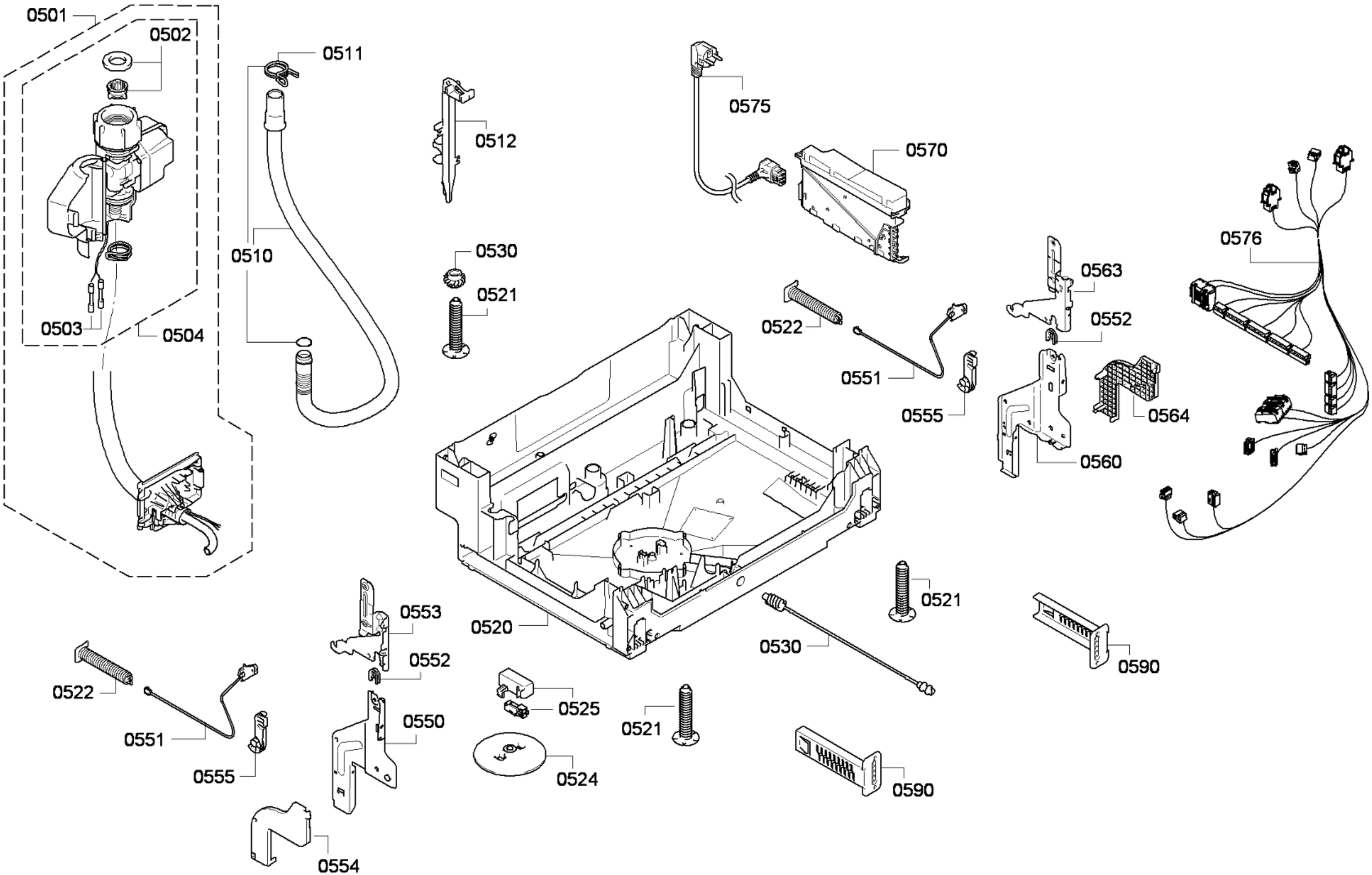

583000001411 17 aet 000 a 5/6

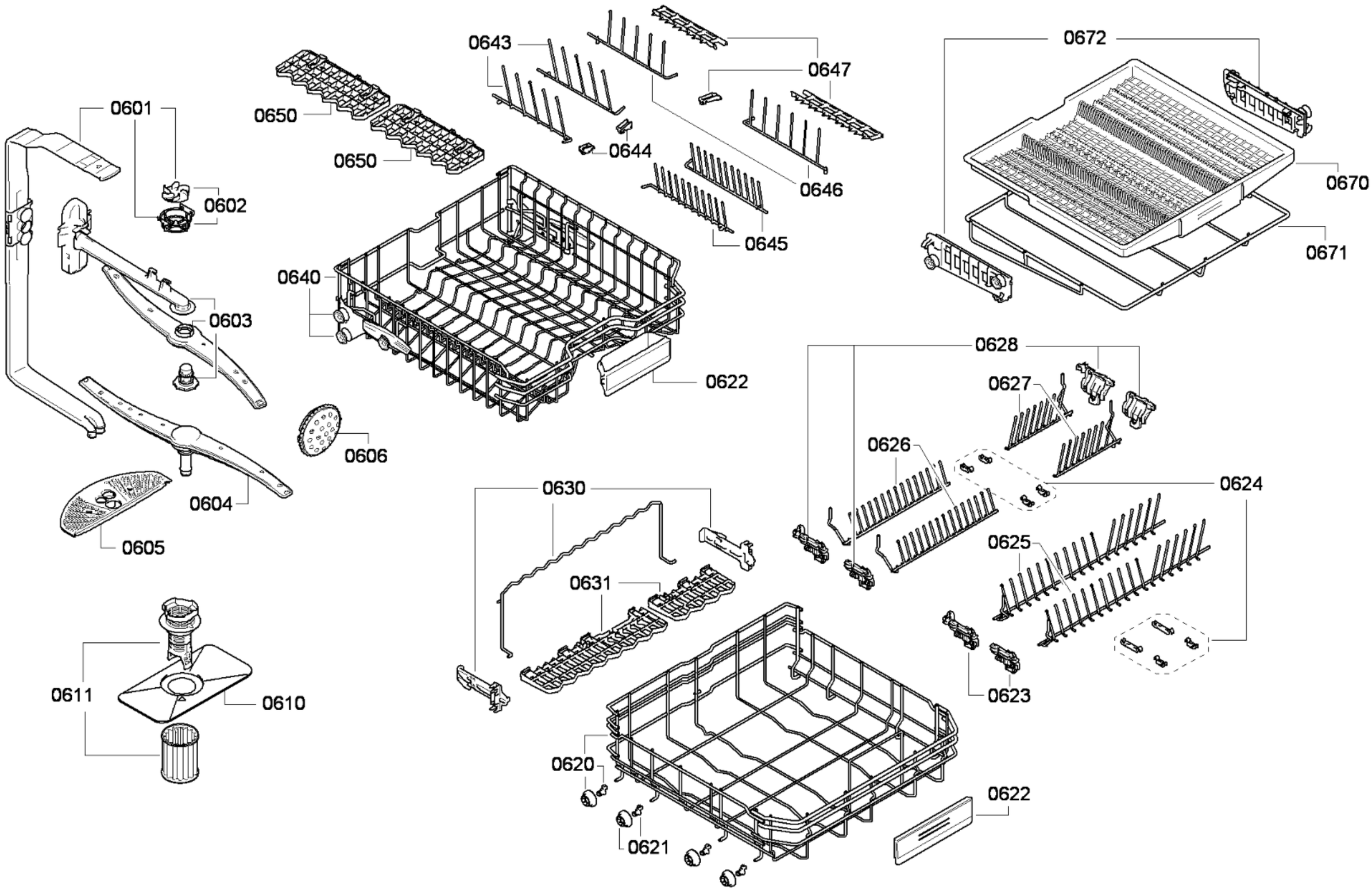
0601
0602
0603
0604
0605
0606
0610
0611
0640
0643
0644
0645
0646
0647
0650
0650
0620
0621
0622
0622
0623
0624
0625
0626
0627
0628
0630
0631
0670
0671
0672